CORD	REV	REVISION RECORD	AUTHORITY	DATE
	A	ECO 2229	S.C.	10-91
	B	ECO 2236	S.C.	10-91
	C	ECO 2556	W.C.	1-92
	D	ECO 2957	W.C.	12-92
	E	ECO 3000	W.C.	12-92
	F	ECO 3019	W.C.	3-93
	G	ECO 3045	W.C.	3-93
	H	ECO 3067	W.C.	3-93
	I	ECO 3138	LLC	5-5-93

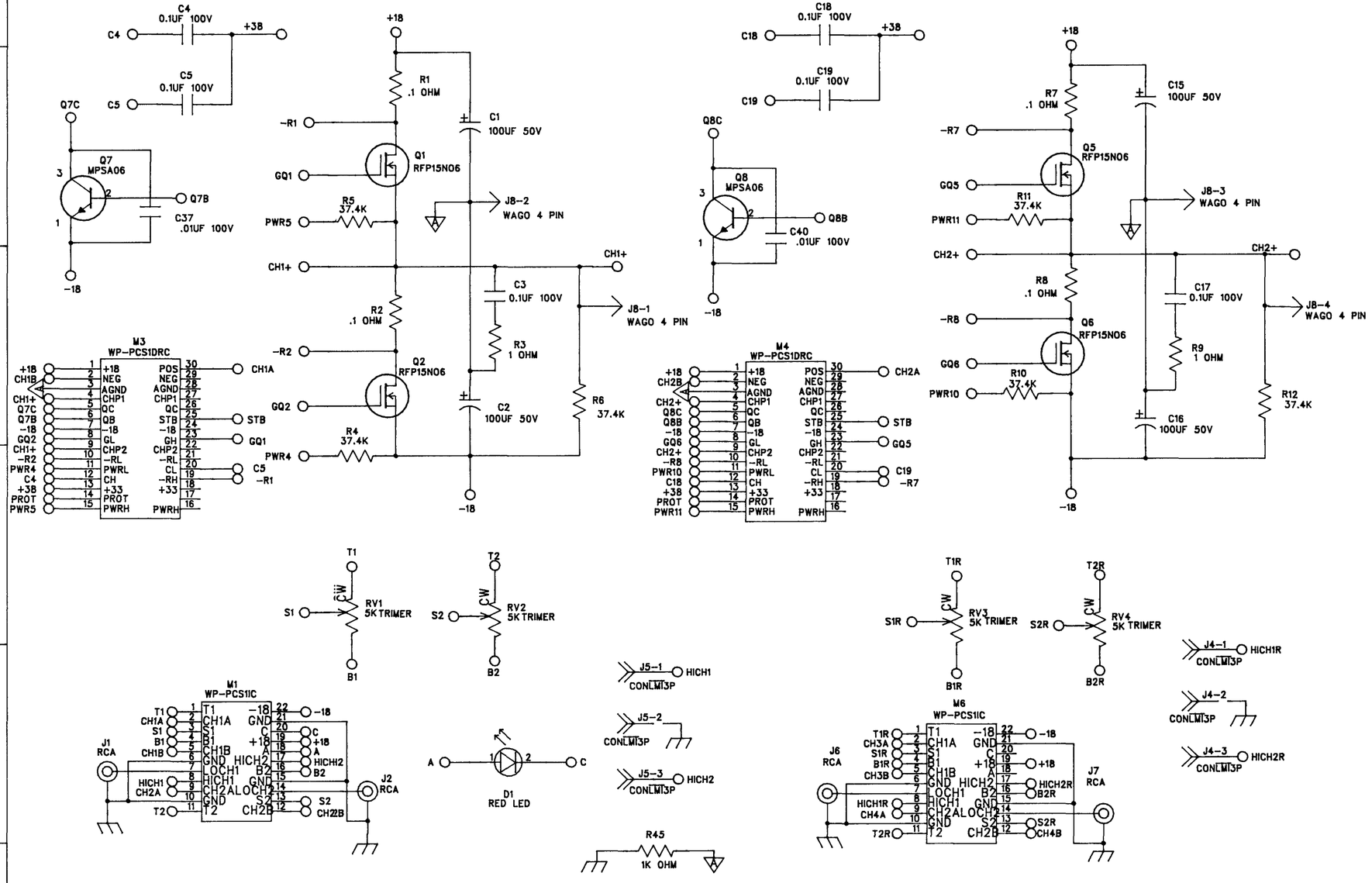

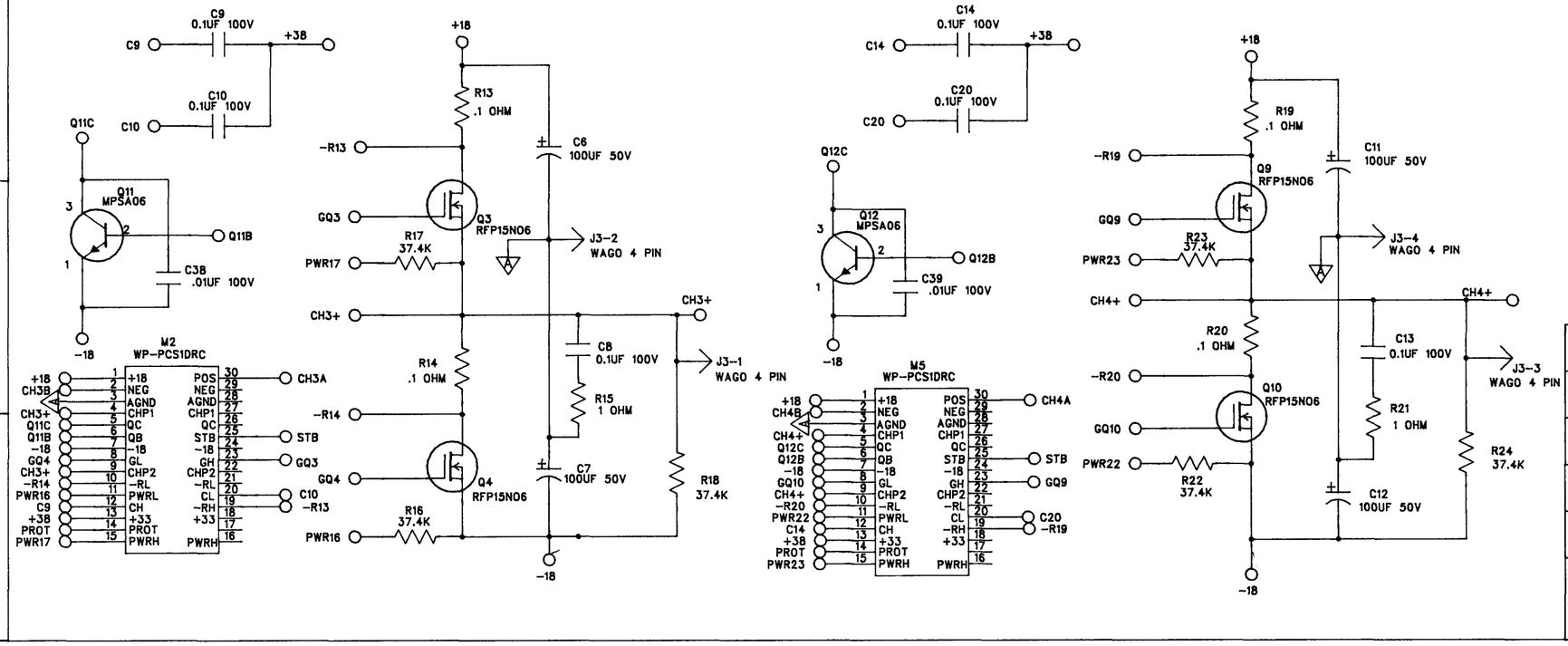

CONFIDENTIAL

© Copyright 19 93 Rockford Corporation. This drawing is the property of Rockford Corporation and embodies confidential information, trade secret information, and/or know-how which is the property of Rockford Corporation. By accepting this drawing, the recipient agrees not to provide, or otherwise make available, the drawing, or any information or know-how embodied therein, to any third party without prior written authorization.

DWN	CLIFFORD	4/20/90	ROCKFORD CORPORATION FOSGATE DIVISION TEMPE AZ
CHK		5/19/93	
ENGR	CLIFFORD	4/20/90	TITLE: SCHEMATIC SERIES ONE 460 AMPLIFIER
APVD		5/25/93	
APVD		5-19-93	SIZE C / SCALE / SHEET 1 OF 2
MATL/FS		FILE NAME: 460SDI	PART NO.: SCH-460 / REV: I

NOTE

PRIMARY PART # IS SS-761 MTA30N06E (4)
REF DES Q13, Q14, Q17, Q18
SECONDARY PART # SS-0348 MTP50N05E
WITH HW-884 INSUL SILPAD
PER ECO 3045

PRIMARY PART # SS-758 MUR1610CTR (1)
REF DES Q16
SECONDARY PART # SS-763 MUR1615CTR

PRIMARY PART # SS-759 MUR1610CT (1)
REF DES Q15
SECONDARY PART # SS-762 MUR1615CT
PER ECO 3138

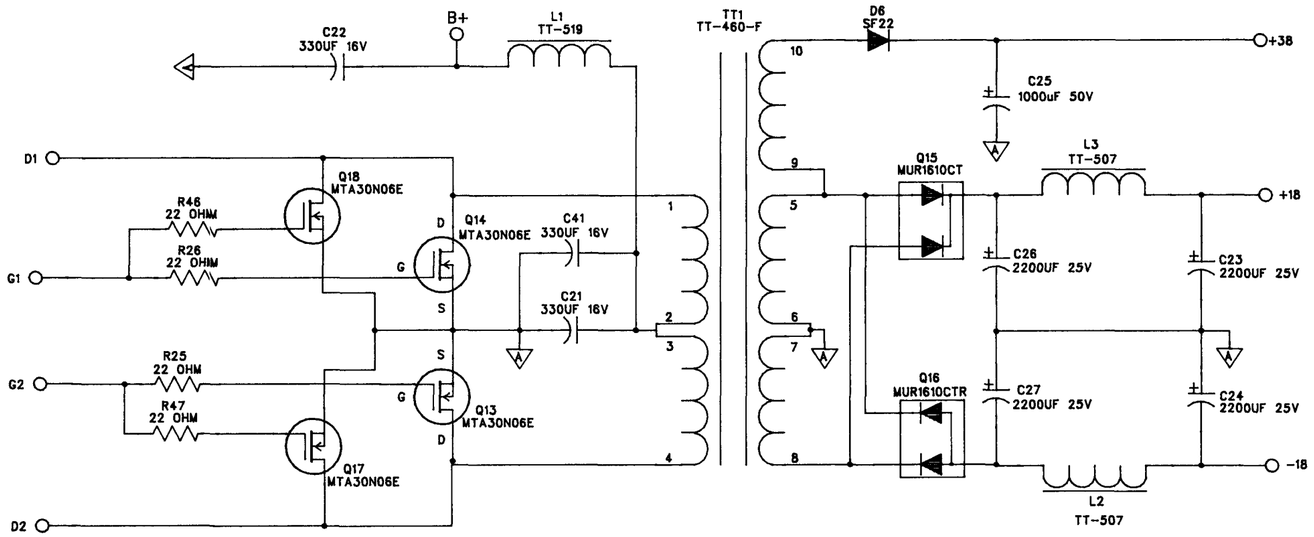

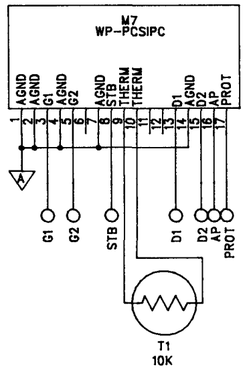

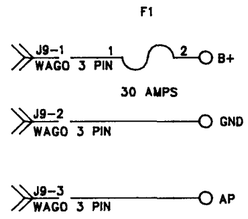

CONFIDENTIAL

© Copyright 19 93 Rockford Corporation. This drawing is the property of Rockford Corporation and embodies confidential information, trade secret information, and/or know-how which is the property of Rockford Corporation. By accepting this drawing, the recipient agrees not to provide, or otherwise make available, the drawing, or any information or know-how embodied therein, to any third party without prior written authorization.

DWN	C. SHAH	6/25/91	ROCKFORD CORPORATION FOSGATE DIVISION TEMPE AZ	
CHK		5/6/93		
ENGR	CLIFFORD	6/25/91	TITLE SCHEMATIC FOR SERIES ONE 460 PWR SUPPLY WP-460C	
APVD		5/25/93		
APVD		5-13-93	SIZE C	SCALE / SHEET 2 OF 2
MATL/FS			FILE NAME 460SDI	PART NO. SCH-460 / REV 1